# Soil Temperature and Moisture sensor

Type: RD-SMT-P-D

## 1. Product Introduce

The newer generation of soil moisture, temperature 2-in-one sensor is a soil sensor developed with a new technical solution. It can measure soil moisture, temperature at the same time, and perform compensation calculations between parameters.

This product can be used to measure the water content of saline-alkali land without being affected by the salt content of the soil and accurately measure the water content of the soil.

Adhering to the company's consistent product quality, strong and durable. Imported epoxy resin, high-quality stainless steel, more resistant to acid and alkali corrosion, steel needle isolation, never electrolysis.

It has multi-directional protection functions for power lines, ground lines, and signal lines to prevent damage caused by reverse connection and wrong connection.

It added TVS, a transient protection diode, which has been protected against lightning.

## 2. Product Features

1. Easy measurement

Soil moisture and temperature testing are no longer limited to laboratories and professionals, and can be measured by inserting into the soil.

2. Low measurement cost

Compared with traditional laboratory measurement, this product has low cost, fewer steps, no reagents required, and unlimited testing times.

3. High precision

High accuracy, fast speed, can reach accuracy within 3-5%, increase stability.

4. Portable measurement

Convenient to carry, can be read by inserting the soil, can grasp the soil condition at any time, make the soil fertility balanced, and reach the suitable growth environment of the plant.

## 3. Product application

It is suitable for water-saving agricultural irrigation, greenhouses, flowers and vegetables, grassland pastures, soil measurement, plant cultivation, scientific experiments, underground oil transportation, gas pipelines and other pipeline anti-corrosion monitoring.

# 4. Product Parameter

1. Technical Parameters

- Measurement parameters: soil moisture and temperature
- Measuring range
  - Temperature: -40° C~80° C
  - Moisture: 0~100% RH
- Measurement accuracy:
  - Temperature: ±0.5° C
  - Moisture: 0-50%, ±2%; 53%-100%, ±3%
- Resolution:
  - Temperature: 0.01℃
  - Moisture: 0.01%RH
- Measuring principle
  - Temperature: RTD thermal element, plus nonlinear correction
  - Moisture: Frequency domain (FDR), plus temperature and conductivity correction
- Response time: ＜1s
- Measuring stable time: ＜1s
- Output signal: RS485 (standard Modbus-RTU protocol, default address: FE)
- Baud rate: 9600/4800/2400bps, default is 9600bps
- Supply voltage: 5-24VDC(2-5V DC can be custom made)
- Quiescent current: peak value <30mA, average <10mA
- Working temperature range: -40° C~80° C

2. Physical parameter

- Sealing material: ABS engineering plastic, epoxy resin, waterproof grade IP68
- Probe Material: Austenitic 316 stainless steel which Anti-rust, anti-electrolysis, salt and alkali resistance, Suitable for all kinds of soil
- Measuring area: centered on the central probe, inside a cylinder with a diameter of 7cm and a height of 10cm
- Cable length: standard 3.5 meters (5-core sheathed wire, UL2464-22AWG-5C), user can customize the length

## 5. Product Size

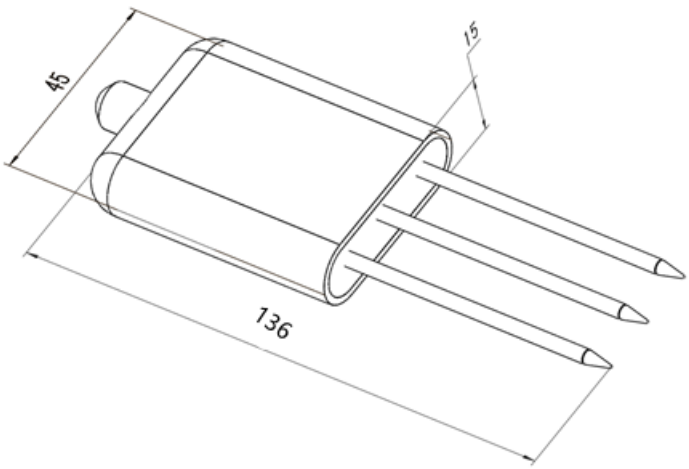


## 6. Connection method

The soil sensor can be connected to various data collectors, data acquisition cards, remote data acquisition modules and other equipment carrying differential inputs.

1. RS485 connection

| **Wire colour** | **Interface** |
|---|---|
| Red | Power positive |
| Black | Power negative |
| Yellow | RS485A |
| White | RS485B |

# 7. Measurement methods

1. Soil Surface measure method

- Select a representative soil environment to clean up surface debris and vegetation
- Insert the sensor vertically and completely into the soil
- If there is a hard object, the measurement location should be replaced and re-measured
- For accurate data, it is recommended to measure multiple times and take the average
- To measure deep soil moisture, it is recommended to use our company's dedicated soil drill

2. Buried measure method

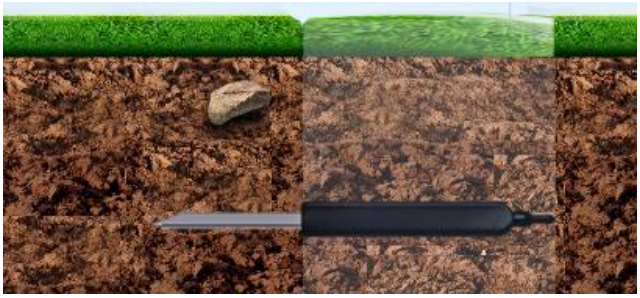

- Make a soil profile in the vertical direction, slightly deeper than the installation depth of the bottommost sensor, between 20cm and 50cm in diameter
- Insert the sensor horizontally into the soil profile
- After the installation is completed, the excavated soil is backfilled in order, layered and compacted, and horizontal installation is guaranteed.
- If you have the conditions, you can put the removed soil in a bag and number it to keep the soil moisture unchanged, and backfill it in reverse order.

3. Three-tier installation

5. Measure Notes

(1). All steel needles must be inserted into the soil during measurement.

(2). Avoid direct sunlight on the sensor, which will cause excessive temperature. Field ambassador use caution against lightning strikes.

(3). Do not bend the steel needle violently, do not pull the sensor lead wire with force, do not beat or violently impact sensor.

(4). The protection grade of the sensor is IP68, which can soak the sensor in water.

(5). Due to the presence of radio frequency electromagnetic radiation in the air, it should not be left in the air for a long time power-on state

## 8. Data conversion method

**1. Standard Modbus-RTU protocol**

Baud rate: 9600bps can be set, factory default is 9600bps; Check digit: none;

Data bit: 8; Stop bit: 1

**2. Brief description of MODBUS-RTU protocol**

1. Function code: the content of the second byte sent by the host. Among them, the function code 03 and 04 are to read the register value; the function code 06 is to write a single register; the function code 16 is to write multiple registers; the function code 17 is to read the device ID. No response to other function codes.

2. Acronym description:

**TT:** station address, address range 1-255 (factory default 254, 0xFE);

**SS:** start address, 2 bytes, high byte first;

**NN:** number of registers (NN≤11), 2 Byte, high byte first;

**MM:** number of bytes, 1 byte;

**RR:** register address, a group of 2 bytes, high byte first;

**VV:** register value, a group of 2 bytes, high byte Before;

**CRC:** CRC check code;

**? ?** :version number

1) 03, 04 function codes, read single (or multiple) registers (read up to 8 registers at a time)

Host sends: TT 03 SS SS NN NN CRC1 CRC2, 8 bytes,

Slave response: TT 03 MM VV VV. . . CRC1 CRC2, up to 21 bytes

2) 06 function code, write a single register

Host sending: TT 06 RR RR VV VV CRC1 CRC2, 8 bytes

Slave response: TT 06 RR RR VV VV CRC1 CRC2, 8 bytes

3) 16 (0X10) function code, write multiple registers

Host sending: TT 10 SS SS NN NN MM VV VV .. .. CRC1 CRC2, up to 9+16=25 bytes

Slave response: TT 10 SS SS NN NN CRC1 CRC2, 8 bytes

4) 17 (0X11) function code, read the device ID

Host sending: TT 11 CRC1 CRC2, 4 bytes

Slave response: TT 11 0B "SMET-3A-485??" CRC1 CRC2, 19 bytes

**3. Communication protocol examples and explanations**

1. For example, to get the value in the sensor address 01:

Host sends: 01 03 00 00 00 02 C4 0B

The meaning of the data:

01-station address 01;

03-function code;

0000-register start address;

0002-read 2 registers;

C40B-CRC check code

Sensor response: 01 03 04 0A D6 08 63 5F FA

The meaning of the data:

01-station address 01;

03-function code;

04-byte number, indicating that there are 4 bytes of data behind;

0AD6- converted to decimal is 2774, divided by 100 is equal to 27.74, representing 27.74% moisture;

0863- converted to decimal It is 2147, divided by 100 equals21.47, which means that the temperature is 21.47°C;

5FFA-CRC code

Note: The FE is the broadcast address (universal address), if you forget the present sensor address, you can use the broadcast address FE to obtain the value:

FE 03 00 00 00 02 D0 04 to obtain sensor moisture, temperature data.

2. Example of setting address

For example, change the sensor address from 01 to 02, need send the following instruction:

Host send: 01 06 02 00 00 02 09 B3

The meaning of the data:

01-present sensor address 01;

06-function code;

0200-register address;

0002-set new address 02

09 B3-CRC check code.

If success, it will feedback: 01 06 02 00 00 02 09 B3

Note: If you forget the present sensor address value, you can check the sensor address by the following instruction:

Host sends: FE 03 02 00 00 01 91 BD

If feedback: FE 03 02 00 01 6D 90

It mean the sensor address is 01.

**5. Sensor internal register address table:**

| Register address: | Register address HEX: | Content | Read and write | Value range | Function code | Numerical meaning | Note |
|---|---|---|---|---|---|---|---|
| 00 | 00 | Soil moisture | Read only | 0-10000 | 3/4 | 0.00-100.00% | |
| 01 | 01 | Soil temperature | Read only | -4000-+8000 | 3/4 | -40.00℃~80.00℃* | |
| 02 | 02 | Reserve | Read only | 0 | 3/4 | | |
| 03 | 03 | Reserve | Read only | 0 | 3/4 | | |
| 04 | 04 | Original AD value of moisture | Read only | 0-65535 | 3/4 | Original AD value of moisture | |
| 05 | 05 | Reserve | Read only | 0 | 3/4 | | |
| 06 | 06 | | Read only | 0-65535 | 3/4 | 0-65535 | Factory use |
| 07 | 07 | | Read only | 0-65535 | 3/4 | 0-65535 | Factory use |
| 37 | 0X26 | Soil Moisture Coefficient Correction | Read and write | -1000~2000 | 3/6/16 | -1.000~+2.000 | 0 |
| 38 | 0X27 | Soil moisture addition and subtraction correction | Read and write | -2000~2000 | 3/6/16 | -20.00%~+20.00% | 0 |
| 512 | 0X200 | Sensor address | Read and write | 1-255 | 3/6/16 | MODBUS station address, | |
| 513 | 0X201 | Baud rate | Read and write | 0-5 | 3/6/16 | 0-1200<br>1-2400<br>2-4800<br>3-9600, Default<br>4-19200<br>5-38400 | |
| 514 | 0X202 | Parity check | Read and write | 0,1,2 | 3/6/16 | 0-no check, default<br>1- odd parity<br>2-even parity | |
| 515 | 0X203 | Receive stop bit | Read and write | 0,1 | 3/6/16 | 0-1 stop bit, default<br>1-2 stop bits | |
| 516 | 0X204 | Send stop bit | Read and write | 0,1 | 3/6/16 | 0-1 stop bit<br>1-2 stop bits, default | |

**Note: Serial communication is a fixed 8-bit data bit**